Work Order ID 58666

Thursday, May 13, 2010 11:10:03 AM

Item ID: D3914-041
Revision ID: -
Item Name: Long Basket Lid Assembly (350)
Start Date: 5/13/2010 **Start Qty:** 1.00
Required Date: 5/28/2010 **Req'd Qty:** 1.00
Reference:

Accept

Setup Start
Stop

Cust Item ID:
Customer:

Approvals: **Process Plan:** MF **Date:** 10-5-13 **Tooling:** _____ **Date:** _____
QC: _____ **Date:** _____ **SPC (Y/N):** _____ **Date:** _____

Run Start
Stop

Sequence ID/ Work Center ID	Operation Description	Set Up/ Run Hours	Draw Number	Draw Rev.	Plan Code	Accept Qty	Reject Qty	Reject Number	Insp. Stamp
Draw Nbr	**Revision Nbr**								
D3914	A								
100	Weld per dwg A/R S.S. rod Batch: 111675	0.00							
Large Fab	Large Fab								
Large Fab	**Memo**	0.00							
Large Fab	✓1- assemble ribs , weld as per dwg D3914 using DT9607A ✓2- weld hinge (3) and Mounting brackets as per dwg D3914 ***inspect before welding mesh*** 3- tack weld mesh on basket as per dwg D3914 ***make sure to place mesh correctly on lid, check with label plate before tacking mesh***								
110	QC9- Inspect visual per QSI004- Fusion Welds	0.00							
QC	**Memo**	0.00							
Quality Control									

PD 10.05.21

PD 10.05.26

Dart Aerospace Ltd

W/O:		WORK ORDER CHANGES					
DATE	STEP	PROCEDURE CHANGE	By	Date	Qty	Approval Chief Eng / Prod Mgr	Approval QC Inspector

Part No: _____ **PAR #:** _____ **Fault Category:** _____ **NCR:** Yes No **DQA:** _____ **Date:** _____

Resolution: _____ **Disposition:** _____ **QA: N/C Closed:** _____ **Date:** _____

NCR:		WORK ORDER NON-CONFORMANCE (NCR)						
DATE	STEP	Description of NC Section A	Corrective Action Section B			Verification Section C	Approval Chief Eng	Approval QC Inspector
			Initial Chief Eng	Action Description Chief Eng	Sign & Date			

NOTE: Date & initial all entries

H:\fFORMS\Quality Assurance\approved QA\NCRWO RevE

Work Order ID 58666

Thursday, May 13, 2010 11:10:03 AM

Item ID: D3914-041 **Accept** **Setup Start**

Revision ID:

Item Name: Long Basket Lid Assembly (350) **Stop**

Start Date: 5/13/2010 **Start Qty:** 1.00 **Cust Item ID:**

Required Date: 5/28/2010 **Req'd Qty:** 1.00 **Customer:**

Reference:

Approvals: **Process Plan:** _____ **Date:** _____ **Tooling:** _____ **Date:** _____ **Run Start**

QC: _____ **Date:** _____ **SPC (Y/N):** _____ **Date:** _____ **Stop**

Sequence ID/ Work Center ID	Operation Description	Set Up/ Run Hours	Draw Number	Draw Rev.	Plan Code	Accept Qty	Reject Qty	Reject Number	Insp. Stamp
120 QC Quality Control	QC5- Inspect part completeness to step on W/O	0.00							
	Memo	0.00							
130 Powdercoat Powder Coating	Black Sandtex(Ref:4.3.5.7) per QSI005 4.3	0.00				1	Ø		
	Memo	0.00							
140 HandFinish Hand Finishing	Wing Walk as per dwg QSI005 4.4 Batch	0.00							
	Memo	0.00							

S colorlz6

M1125 88 START: 10:30AM

Temp: 320°F

FIN: 11:00AM

10/05/26

1- Mask data plate and apply wing walk on outside surface of mesh as per dwg

2- Install placard and label as per dwg

1 BR 10-5-26

Dart Aerospace Ltd

W/O:		WORK ORDER CHANGES					
DATE	STEP	PROCEDURE CHANGE	By	Date	Qty	Approval Chief Eng / Prod Mgr	Approval QC Inspector

Part No: _____ PAR #: _____ Fault Category: _____ NCR: Yes No DQA: _____ Date: _____

Resolution: _____ Disposition: _____ QA: N/C Closed: _____ Date: _____

NCR:		WORK ORDER NON-CONFORMANCE (NCR)						
DATE	STEP	Description of NC Section A	Corrective Action Section B			Verification Section C	Approval Chief Eng	Approval QC Inspector
			Initial Chief Eng	Action Description Chief Eng	Sign & Date			

NOTE: Date & initial all entries

H:\fFORMS\Quality Assurance\approved QA\NCRWO RevE

Work Order ID 58666

Thursday, May 13, 2010 11:10:03 AM

Item ID: D3914-041
Revision ID:
Item Name: Long Basket Lid Assembly (350)
Start Date: 5/13/2010 **Start Qty:** 1.00
Required Date: 5/28/2010 **Req'd Qty:** 1.00
Reference:

Accept

Setup **Start** **Stop**

Cust Item ID:
Customer:

Run **Start** **Stop**

Approvals: **Process Plan:** _____ **Date:** _____ **Tooling:** _____ **Date:** _____
QC: _____ **Date:** _____ **SPC (Y/N):** _____ **Date:** _____

Sequence ID/ Work Center ID	Operation Description	Set Up/ Run Hours	Draw Number	Draw Rev.	Plan Code	Accept Qty	Reject Qty	Reject Number	Insp. Stamp
150	QC3- Inspect Part Finish	0.00							
QC	Memo	0.00							
Quality Control									
160	Identify as per dwg & Stock Location: G-A w/o B58776	0.00							
Packaging	Memo	0.00							
Packaging									
170	QC21- Final Inspection - Work Order Release	0.00							
QC	Memo	0.00							
Quality Control									

10/05/26

10/05/26

10/05/26

CL 10/5/26

Dart Aerospace Ltd

W/O:		WORK ORDER CHANGES					
DATE	STEP	PROCEDURE CHANGE	By	Date	Qty	Approval Chief Eng / Prod Mgr	Approval QC Inspector

Part No: _____ PAR #: _____ Fault Category: _____ NCR: Yes No DQA: _____ Date: _____

Resolution: _____ Disposition: _____ QA: N/C Closed: _____ Date: _____

NCR:		WORK ORDER NON-CONFORMANCE (NCR)						
DATE	STEP	Description of NC Section A	Corrective Action Section B			Verification Section C	Approval Chief Eng	Approval QC Inspector
			Initial Chief Eng	Action Description Chief Eng	Sign & Date			

NOTE: Date & initial all entries

H:\fFORMS\Quality Assurance\approved QA\NCRWO RevE

Picklist Print

Thursday, May 13, 2010 11:10:02 AM

3

Work Order ID: 58666

Parent Item: D3914-041

Parent Item Name: Long Basket Lid Assembly (350)

Start Date: 5/13/2010 **Required Date:** 5/28/2010

Comments: IPP Rev:A new issue DD 10.03.19 verified by:EC

Start Qty: 1.00 **Required Qty:** 1.00

Component Item ID/ Item Name	Replacement Item ID	Mfg/ Purch	Bin Item	Primary Location	Last Location	Route Seq ID	Unit of Measure	Qty on Hand	Qty per Kit	Qty Issued	Date Issued	Status
D2581		Manufactured	No			100	Each	36.0000	2		10·05·20	
Mounting Bracket												
				Location			**Loc Qty**		**Loc Code**			
				WA			36					
					46086		2					
					51745		2					
					57185		9					
					58301		23			2		
D2728-3		Manufactured	No			140	Each	0.0000	1			
Dart Logo label												
D3914-1		Manufactured	No			100	Each	6.0000	2	SB 10/05/25	10·05·20	
Rib												
				Location			**Loc Qty**		**Loc Code**	B58617 → 2		
				WA			6					
					58241		2					
					58585		4					
D3914-7		Manufactured	No			100	Each	4.0000	2		10·05·21	
Rib												
				Location			**Loc Qty**		**Loc Code**	B58707 → 2		
				WA			4					
					58242		4					

Dart Aerospace Ltd

W/O:		WORK ORDER CHANGES					
DATE	STEP	PROCEDURE CHANGE	By	Date	Qty	Approval Chief Eng / Prod Mgr	Approval QC Inspector

Part No: _____ **PAR #:** _____ **Fault Category:** _____ **NCR:** Yes No **DQA:** _____ **Date:** _____

Resolution: _____ **Disposition:** _____ **QA: N/C Closed:** _____ **Date:** _____

NCR:		WORK ORDER NON-CONFORMANCE (NCR)						
DATE	STEP	Description of NC Section A	Corrective Action Section B			Verification Section C	Approval Chief Eng	Approval QC Inspector
			Initial Chief Eng	Action Description Chief Eng	Sign & Date			

NOTE: Date & initial all entries

H:\fFORMS\Quality Assurance\approved QA\NCRWO RevE

Picklist Print

Thursday, May 13, 2010 11:10:02 AM

Work Order ID: 58666

Parent Item: D3914-041

Parent Item Name: Long Basket Lid Assembly (350)

Start Date: 5/13/2010 **Required Date:** 5/28/2010

Comments: IPP Rev:A new issue DD 10.03.19 verified by:EC

Start Qty: 1.00 **Required Qty:** 1.00

Component Item ID/ Item Name	Replacement Item ID	Mfg/ Purch	Bin Item	Primary Location	Last Location	Route Seq ID	Unit of Measure	Qty on Hand	Qty per Kit	Qty Issued	Date Issued	Status
D4016-3		Manufactured	No			100	Each	19.0000	3		10-05-20	
Hinge Half, Lid												
				Location		**Loc Qty**		**Loc Code**		B58555 → 3		
				ST109		7						
					57574	7						
				ST116		12						
					58243	12						
D4018-5		Manufactured	No			100	Each	12.0000	9		10-05-21	
Rib												
				Location		**Loc Qty**		**Loc Code**		58977 → 9		
				WA		12						
					58244	12						
D4020-5		Manufactured	No			100	Each	2.0000	1		10-05-25	
Mesh (350 Basket Long, Lid)												
				Location		**Loc Qty**		**Loc Code**		B58483		
				WA		2						
					58245	2						
D4021-3		Manufactured	No			100	Each	3.0000	1		10-05-20	
Data Plate												
				Location		**Loc Qty**		**Loc Code**		~~57701~~ 58616 → 1		
				WA		3						
					56050	1						
					58246	2						

Dart Aerospace Ltd

W/O:		WORK ORDER CHANGES					
DATE	STEP	PROCEDURE CHANGE	By	Date	Qty	Approval Chief Eng / Prod Mgr	Approval QC Inspector

Part No: _____ PAR #: _____ Fault Category: _____ NCR: Yes No DQA: _____ Date: _____

Resolution: _____ Disposition: _____ QA: N/C Closed: _____ Date: _____

NCR:		WORK ORDER NON-CONFORMANCE (NCR)						
DATE	STEP	Description of NC Section A	Corrective Action Section B			Verification Section C	Approval Chief Eng	Approval QC Inspector
			Initial Chief Eng	Action Description Chief Eng	Sign & Date			

NOTE: Date & initial all entries

H:\fFORMS\Quality Assurance\approved QA\NCRWO RevE

Picklist Print

Thursday, May 13, 2010 11:10:02 AM

Work Order ID: 58666

Parent Item: D3914-041

Parent Item Name: Long Basket Lid Assembly (350)

Start Date: 5/13/2010 **Required Date:** 5/28/2010

Comments: IPP Rev:A new issue DD 10.03.19 verified by:EC

Start Qty: 1.00 **Required Qty:** 1.00

Component Item ID/ Item Name	Replacement Item ID	Mfg/ Purch	Bin Item	Primary Location	Last Location	Route Seq ID	Unit of Measure	Qty on Hand	Qty per Kit	Qty Issued	Date Issued	Status
D4035-041		Manufactured	No			100	Each	2.0000	1			
Lid Rib Assembly, Fwd (350 Basket)											10.05.20	
				Location			**Loc Qty**		**Loc Code**			
				WA			2			58551 → 1		
					58192		2					
D4035-043		Manufactured	No			100	Each	2.0000	1			
Lid Rib Assembly, Aft (350 Basket)											10.05.20	
				Location			**Loc Qty**		**Loc Code**			
				WA			2			58587 → 1		
					58193		2					
D4086-210		Manufactured	No			140	Each	4.0000	1			
Placard, Max Load												
				Location			**Loc Qty**		**Loc Code**			
				ST112			4			~~4~~ 1	8 10/05/20	
					56978		4					

B58926

Dart Aerospace Ltd

W/O:		WORK ORDER CHANGES					
DATE	STEP	PROCEDURE CHANGE	By	Date	Qty	Approval Chief Eng / Prod Mgr	Approval QC Inspector

Part No: _____ **PAR #:** _____ **Fault Category:** _____ **NCR:** Yes No **DQA:** _____ **Date:** _____

Resolution: _____ **Disposition:** _____ **QA: N/C Closed:** _____ **Date:** _____

NCR:		WORK ORDER NON-CONFORMANCE (NCR)						
DATE	STEP	Description of NC Section A	Corrective Action Section B			Verification Section C	Approval Chief Eng	Approval QC Inspector
			Initial Chief Eng	Action Description Chief Eng	Sign & Date			

NOTE: Date & initial all entries

H:\fFORMS\Quality Assurance\approved QA\NCRWO RevE

ITEM	QTY -041	P/N	DESCRIPTION
	X	D3914-041	SHORT BASKET LID ASSY (350)
1	1	D3914-101	TUBULAR ASSY, LONG LID
2	2	D2581	MOUNTING BRACKET
3	1	D2728-3	DART LOGO LABEL
4	3	D4016-3	HINGE HALF, LID
6	1	D4020-5	LID MESH, 350 LONG BASKET
7	1	D4021-3	DATA PLATE
8	1	D4086-210	PLACARD, MAX LOAD

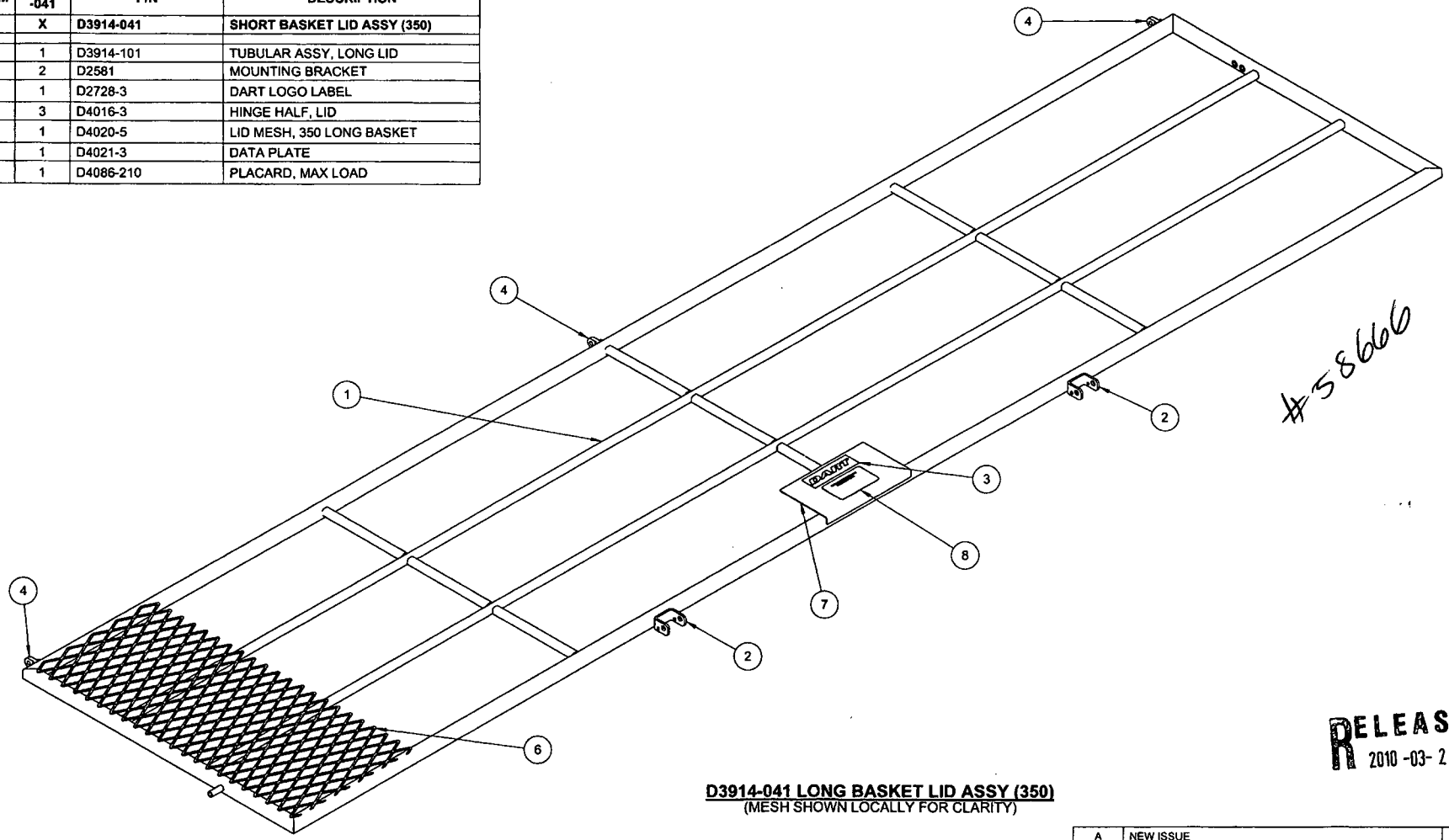

#58666

RELEASED
2010 -03- 22

D3914-041 LONG BASKET LID ASSY (350)
(MESH SHOWN LOCALLY FOR CLARITY)

REV.	DESCRIPTION	BY	DATE
A	NEW ISSUE	JPH	10.03.16

DESIGN	AJS	DART AEROSPACE LTD HAWKESBURY, ONTARIO, CANADA
DRAWN	JPH	
CHECKED		DRAWING NO. D3914 — REV. A — SHEET 1 OF 4
MFG. APPR.		
APPROVED		TITLE: LONG BASKET LID ASSY (350) — SCALE: NTS
DE APPR.		
DATE	10.03.16	

Dart Aerospace Ltd

W/O:		WORK ORDER CHANGES					
DATE	STEP	PROCEDURE CHANGE	By	Date	Qty	Approval Chief Eng / Prod Mgr	Approval QC Inspector

Part No: _____ **PAR #:** _____ **Fault Category:** _____ **NCR:** Yes No **DQA:** _____ **Date:** _____

Resolution: _____ **Disposition:** _____ **QA: N/C Closed:** _____ **Date:** _____

NCR:		WORK ORDER NON-CONFORMANCE (NCR)						
DATE	STEP	Description of NC Section A	Corrective Action Section B			Verification Section C	Approval Chief Eng	Approval QC Inspector
			Initial Chief Eng	Action Description Chief Eng	Sign & Date			

NOTE: Date & initial all entries

H:\FORMS\Quality Assurance\approved QA\NCRWO RevE

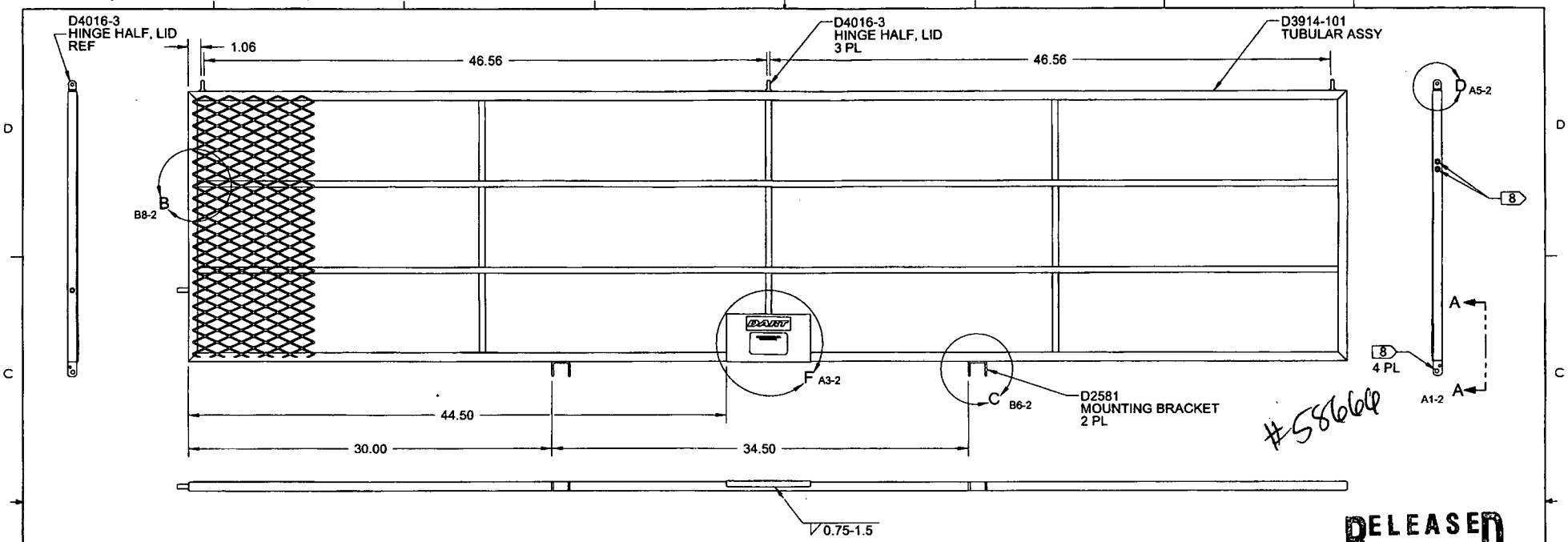

#586668

RELEASED
2010-03-22

D3914-041 LONG BASKET LID ASSY (350)
(MESH SHOWN LOCALLY FOR CLARITY)

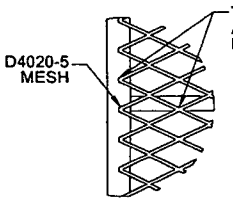

DETAIL B D8-2

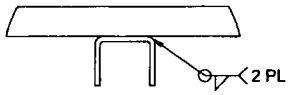

DETAIL C C3-2

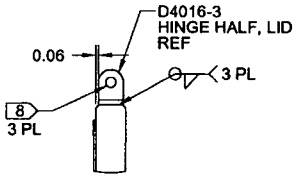

DETAIL D D1-2

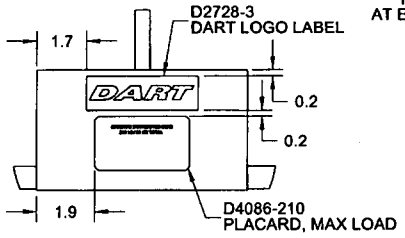

DETAIL F C4-2

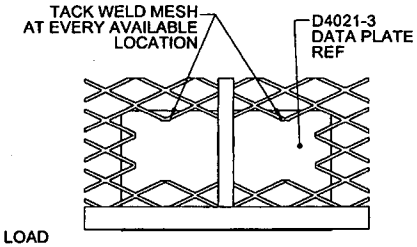

VIEW A-A C1-2

NOTES:
1) MATERIAL: N/A
2) FINISH: POWDER COAT BLACK SANDTEX (4.3.5.7) PER DART QSI 005 4.3
APPLY BLACK ANTI-SKID PAINT TO OUTSIDE SURFACE OF MESH PER DART QSI 005 4.4
3) TOLERANCES: PER DART QSI 018 UNLESS OTHERWISE NOTED
4) UNITS: INCHES UNLESS OTHERWISE NOTED
5) BREAK SHARP EDGES: N/A
6) IDENTIFICATION: N/A
7) WEIGHT: 22.35 lbs APPROX
8) MASK HOLES PRIOR TO FINISHING
9) WELD PER DART QSI 004

DESIGN	AJS	**DART AEROSPACE LTD** HAWKESBURY, ONTARIO, CANADA
DRAWN	JPH	
CHECKED		DRAWING NO. D3914 — REV. A — SHEET 2 OF 4
MFG. APPR.		
APPROVED		TITLE: LONG BASKET LID ASSY (350) — SCALE: NTS
DE APPR.		
DATE	10.03.16	

Dart Aerospace Ltd

W/O:		WORK ORDER CHANGES					
DATE	STEP	PROCEDURE CHANGE	By	Date	Qty	Approval Chief Eng / Prod Mgr	Approval QC Inspector

Part No: _____ PAR #: _____ Fault Category: _____ NCR: Yes No DQA: _____ Date: _____

Resolution: _____ Disposition: _____ QA: N/C Closed: _____ Date: _____

NCR:		WORK ORDER NON-CONFORMANCE (NCR)						
DATE	STEP	Description of NC Section A	Corrective Action Section B			Verification Section C	Approval Chief Eng	Approval QC Inspector
			Initial Chief Eng	Action Description Chief Eng	Sign & Date			

NOTE: Date & initial all entries

H:\FORMS\Quality Assurance\approved QA\NCRWO RevE

ITEM	QTY -101	P/N	DESCRIPTION
	X	D3914-101	TUBULAR ASSY, BASKET LID (350)
1	2	D3914-1	RIB
2	2	D3914-7	RIB
3	9	D4018-5	RIB
4	1	D4035-041	BASKET LID RIB ASSY, FWD
5	1	D4035-043	BASKET LID RIB ASSY, AFT

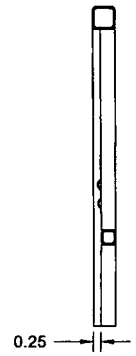

SECTION E-E C5-3

#58664

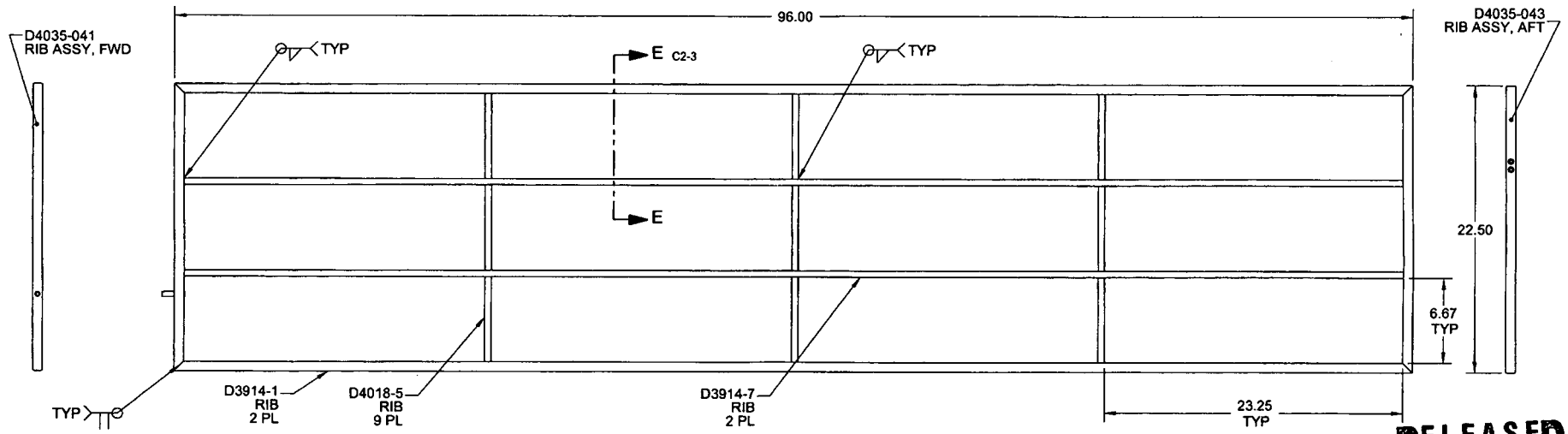

RELEASED
2010 -03- 22

8 **D3914-101 TUBULAR ASSY, LONG LID**

NOTES:
1) MATERIAL: N/A
2) FINISH: NONE
3) TOLERANCES: PER DART QSI 018 UNLESS OTHERWISE NOTED
4) UNITS: INCHES UNLESS OTHERWISE NOTED
5) BREAK SHARP EDGES: N/A
6) IDENTIFICATION: N/A
7) WEIGHT: 14.10 lbs
8) TOLERANCE FOR XX.XX DIMENSIONS ±0.06 FOR D4018-101
9) WELD PER DART QSI 004

DESIGN	AJS	DART AEROSPACE LTD HAWKESBURY, ONTARIO, CANADA
DRAWN	JPH	
CHECKED		DRAWING NO. D3914 — REV. A — SHEET 3 OF 4
MFG. APPR.		
APPROVED		TITLE: LONG BASKET LID ASSY (350) — SCALE: NTS
DE APPR.		
DATE	10.03.16	

Dart Aerospace Ltd

W/O:		WORK ORDER CHANGES					
DATE	STEP	PROCEDURE CHANGE	By	Date	Qty	Approval Chief Eng / Prod Mgr	Approval QC Inspector

Part No: _____ **PAR #:** _____ **Fault Category:** _____ **NCR:** Yes No **DQA:** _____ **Date:** _____

Resolution: _____ **Disposition:** _____ **QA: N/C Closed:** _____ **Date:** _____

NCR:		WORK ORDER NON-CONFORMANCE (NCR)						
DATE	STEP	Description of NC Section A	Corrective Action Section B			Verification Section C	Approval Chief Eng	Approval QC Inspector
			Initial Chief Eng	Action Description Chief Eng	Sign & Date			

NOTE: Date & initial all entries

H:\FORMS\Quality Assurance\approved QA\NCRWO RevE

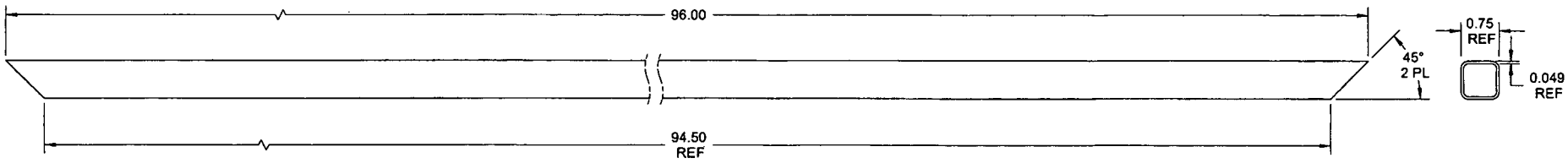

D3914-1 RIB

#556666

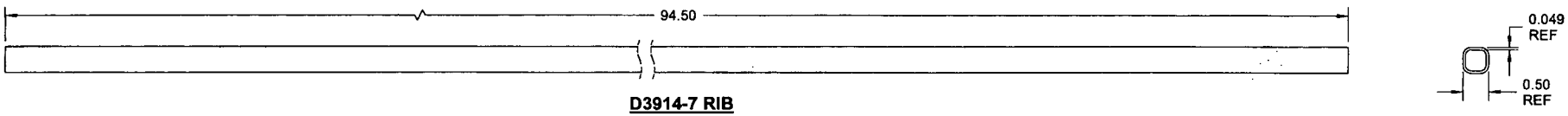

D3914-7 RIB

RELEASED
2010-03-22

NOTES:
1) MATERIAL -1: AISI 304/316 STAINLESS STEEL SQUARE TUBE, 0.75 X 0.75 X 0.049 WALL
REF DART SPEC. M304TS0.750W.049

-7: AISI 304/316 STAINLESS STEEL SQUARE TUBE, 0.50 X 0.50 X 0.049 WALL
REF DART SPEC. M304TS0.500W.049

2) FINISH: NONE
3) TOLERANCES: PER DART QSI 018 UNLESS OTHERWISE NOTED
4) UNITS: INCHES UNLESS OTHERWISE NOTED
5) BREAK SHARP EDGES: 0.005 TO 0.010 MAX
6) IDENTIFICATION: N/A
7) WEIGHT: SEE ASSEMBLED WEIGHTS

DESIGN	AJS	**DART AEROSPACE LTD** HAWKESBURY, ONTARIO, CANADA
DRAWN	JPH	
CHECKED		DRAWING NO. D3914 — REV. A — SHEET 4 OF 4
MFG. APPR.		
APPROVED		TITLE: LONG BASKET LID ASSY (350) — SCALE: NTS
DE APPR.		
DATE	10.03.16	

Dart Aerospace Ltd

W/O:		WORK ORDER CHANGES					
DATE	STEP	PROCEDURE CHANGE	By	Date	Qty	Approval Chief Eng / Prod Mgr	Approval QC Inspector

Part No: _____ PAR #: _____ Fault Category: _____ NCR: Yes No DQA: _____ Date: _____

Resolution: _____ Disposition: _____ QA: N/C Closed: _____ Date: _____

NCR:		WORK ORDER NON-CONFORMANCE (NCR)						
DATE	STEP	Description of NC Section A	Corrective Action Section B			Verification Section C	Approval Chief Eng	Approval QC Inspector
			Initial Chief Eng	Action Description Chief Eng	Sign & Date			

NOTE: Date & initial all entries

H:\fFORMS\Quality Assurance\approved QA\NCRWO RevE